HXYx 3 axes / ZH

Arm type | Cable carrier | Z-axis: clamped table / moving base type (200W)

Ordering method

HXYx - C	-	[ ]	-	[ ]	-	[ ]	- ZH -	[ ]	-	[ ]	- RCX240 -	[ ]	- R -	[ ]	-	[ ]	- BB
Model	Cable	Combination	X-axis stroke	Y-axis stroke	ZR-axis	Z-axis stroke	Cable length	Controller	Usable for CE	Regenerative unit	Option I/O Note 1	Network option	Battery
		A1 A2 A3 A4	25 to 125cm	25 to 65cm		25 to 55cm	3L: 3.5m (Standard) 5L: 5m 10L: 10m		No entry: Standard E: CE marking	R: RGU-2	N, P: Standard I/O 16/8 N1, P1: 40/24 N2, P2: 64/40 N3, P3: 88/56 N4, P4: 112/72	No entry: None CC: CC-Link DN: DeviceNet PB: Profibus EN: Ethernet YC: YC-Link Note 2	BB: 4 pcs

Note 1. N to N4 if NPN was selected, or P to P4 if PNP was selected for the I/O board.
Note 2. Available only for the master.

Specification

	X-axis	Y-axis	Z-axis
Axis construction Note 1	F20	F17	F14H-BK
AC servo motor output (W)	600	400	200
Repeatability Note 2 (mm)	+/-0.01	+/-0.01	+/-0.01
Drive system	Ball screw (Class C7)	Ball screw (Class C7)	Ball screw (Class C7)
Ball screw lead (Deceleration ratio) (mm)	20	20	5
Maximum speed Note 3 (mm/sec) (°/sec)	1200	1200	300
Moving range (mm)	250 to 1250	250 to 650	250 to 550
Robot cable length (m)	Standard: 3.5 Option: 5,10		

Note 1. Use caution that the flame machining (installation holes, tap holes) differs from single-axis robots'.
Note 2. Positioning repeatability in one direction.
Note 3. When the X-axis stroke is longer than 850mm, resonance of the ball screw may occur depending on the operation conditions (critical speed). In this case, reduce the speed setting on the program by referring to the maximum speeds shown in the table below.

Maximum payload (kg)

	Z stroke (mm)			
Y stroke (mm)	250	350	450	550
250	25	25	24	23
350	25	25	24	23
450	20	20	19	18
550	18	17	16	15
650	18	17	16	15

Controller

Controller	Operation method
RCX240-R	Programming / I/O point trace / Remote command / Operation using RS-232C communication

HXYx 3 axes / ZH A1

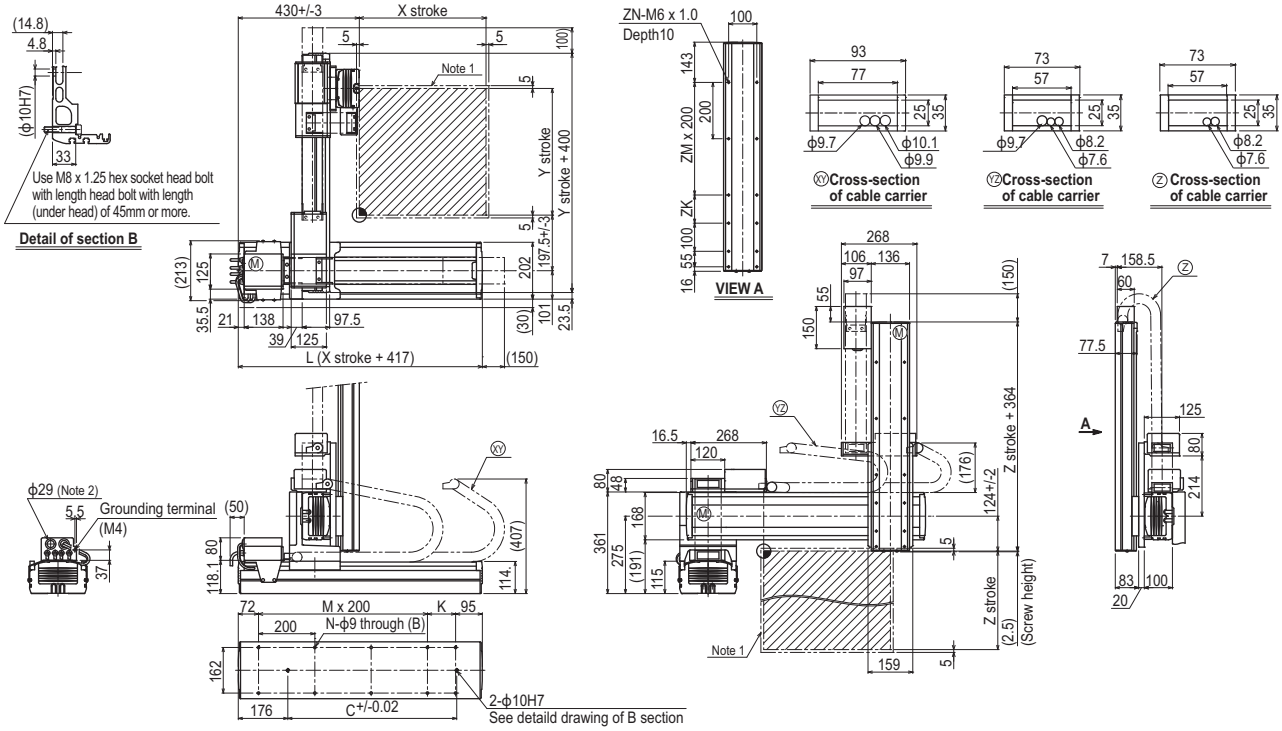

X stroke	250	350	450	550	650	750	850	950	1050	1150	1250
L	667	767	867	967	1067	1167	1267	1367	1467	1567	1667
K	100	200	100	200	100	200	100	200	100	200	100
C	420	420	600	600	780	780	960	960	1140	1320	1320
M	2	2	3	3	4	4	5	5	6	6	7
N	8	8	10	10	12	12	14	14	16	16	18

Y stroke	250	350	450	550	650

Z stroke	250	350	450	550
ZK	100	200	100	200
ZM	1	1	2	2
ZN	10	10	12	12

Maximum speed for each stroke (mm/sec) Note 3								
X-axis	1200				960	840	720	600	480
Speed setting	–				80%	70%	60%	50%	40%

Note 1. The moving range when returning to origin and the stop position when stopping by the mechanical stopper.
Note 2. User cable extraction port.
Note 3. When the X-axis stroke is longer than 850mm, resonance of the ball screw may occur depending on the operation conditions (critical speed). In this case, reduce the speed setting on the program by referring to the maximum speeds shown in the table at the left.