SXYx 4 axes / ZRS

Arm type | Cable carrier | ZR axis integrated type

Ordering method

SXYx - C	-	[ ]	-	[ ]	-	[ ]	-	[ ]	- 15	-	[ ]	- RCX240	-	[ ]	-	[ ]	-	[ ]	- BB
Model	Cable	Combination	X-axis stroke	Y-axis stroke	ZR-axis	Z-axis stroke	Cable length	Controller	Usable for CE	Option I/O Note 1	Network option	Battery
		A1 A2 A3 A4	15 to 105cm	15 to 65cm	ZRS12 ZRS6		3L: 3.5m (Standard) 5L: 5m 10L: 10m		No entry: Standard E: CE marking	N.P: Standard I/O 16 8 N1, P1: 40/24 N2, P2: 64/40 N3, P3: 88/56 N4, P4: 112/72	No entry: None CC: CC-Link DN: DeviceNet PB: Profibus EN: Ethernet YC: YC-Link No e 2	BB: 4 pcs

Note 1. N to N4 if NPN was selected, or P to P4 if PNP was selected for the I/O board.
Note 2. Available only for the master.

Specification

	X-axis	Y-axis	Z-axis ZRS12	Z-axis ZRS6	R-axis
Axis construction Note 1	F14H	F14	–		–
AC servo motor output (W)	200	100	60		100
Repeatability Note 2 (XYZ mm) (R °)	+/-0 01	+/-0.01	+/-0.02		+/-0.005
Drive system	Ball screw (Class C7)	Ball screw (Class C7)	Ball screw (Class C10)		Harmonic gear
Ball screw lead (Deceleration ratio) (mm)	20	20	12	6	(1/50)
Maximum speed Note 3 (XYZ: mm/sec) (R: °/sec)	1200	1200	1000	500	1020
Moving range (XYZ mm) (R °)	150 to 1050	150 to 650	150		360
Robot cable length (m)	Standard: 3.5 Option: 5,10				

Note 1. Use caution that the flame machining (installation holes, tap holes) differs from single-axis robots'.
Note 2. Positioning repeatability in one direction.
Note 3. When the X-axis stroke is longer than 750mm, resonance of the ball screw may occur depending on the operation conditions (critical speed). In this case, reduce the speed setting on the program by referring to the maximum speeds shown in the table below.

Maximum payload (kg)

Y stroke (mm)	ZRS12	ZRS6
150	3	5
250	3	5
350	3	5
450	3	5
550	3	5
650	3	4

Controller

Controller	Operation method
RCX240	Programming / /O point trace / Remote command / Operation using RS-232C communication

SXYx 4 axes / ZRS A1

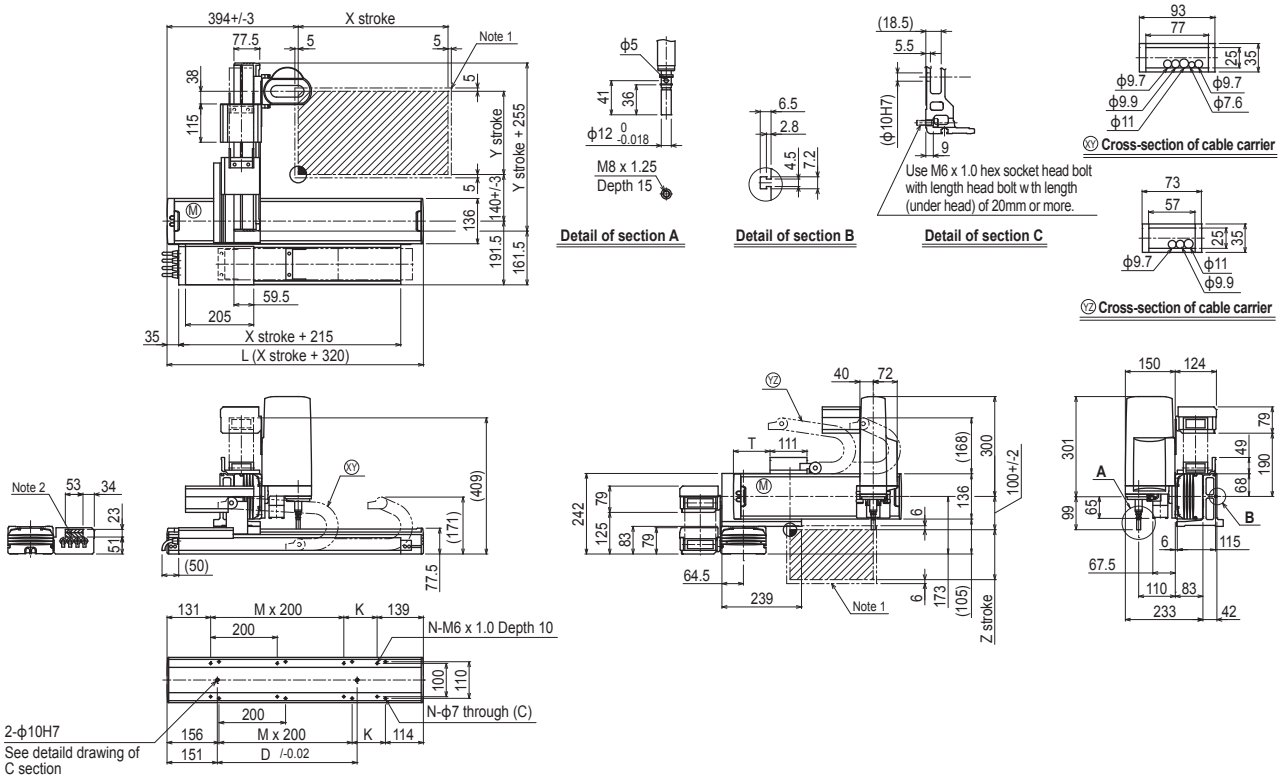

X stroke	150	250	350	450	550	650	750	850	950	1050
L	470	570	670	770	870	970	1070	1170	1270	1370
K	200	100	200	100	200	100	200	100	200	100
D	240	240	420	420	600	600	780	960	960	1140
M	0	1	1	2	2	3	3	4	4	5
N	4	6	6	8	8	10	10	12	12	14

Y stroke	150	250	350	450	550	650
T	55	110	165	220	275	330

Z stroke	150

Maximum speed for each stroke (mm/sec) No e 3						
X-axis	1200	960	780	600	540
Speed setting	–	80%	65%	50%	45%

Note 1. The moving range when returning to origin and the stop position when stopping by the mechanical stopper.
Note 2. The shaded position indicates an user cable extraction port.

Note 3. When the X-axis stroke is longer than 750mm, resonance of the ball screw may occur depending on the operation conditions (critical speed). In this case, reduce the speed setting on the program by referring to the maximum speeds shown in the table at the left.