MXYx 3 axes / ZPMH

Pole type | Cable carrier | Z-axis: Clamped table / moving base type (200W) for Pole type

Ordering method

MXYx - C - P2 -	[ ] -	[ ] -	[ ] -	[ ] -	[ ] -	RCX240 -	[ ] -	R -	[ ] -	[ ] -	BB
Model	Cable	Combination	X-axis stroke	Y-axis stroke	ZR-axis	Z-axis stroke	Cable length	Controller	Usable for CE	Regeneratine unit	Option I/O Note 1	Network option	Battery
			25 to 125cm	15 to 65cm	ZPMHL ZPMHR	15 to 35cm	3L: 3.5m (Standard) 5L: 5m 10L: 10m		No entry: Standard E: CE marking	R: RGU-2	N, P: Standard I/O 16/8 N1, P1: 40/24 N2, P2: 64/40 N3, P3: 88/56 N4, P4: 112/72	No entry: None CC: CC-Link DN: DeviceNet PB: Profibus EN: Ethernet YC: YC-Link Note 2	BB: 4 pcs

Note 1. N to N4 if NPN was selected, or P to P4 if PNP was selected for the I/O board.
Note 2. Available only for the master.

Specification

	X-axis	Y-axis	Z-axis
Axis construction Note 1	F17	F14H-BK	F10-BK equivalent guide-reinforced model
AC servo motor output (W)	400	200	200
Repeatability Note 2 (mm)	+/-0.01	+/-0.01	+/-0.01
Drive system	Ball screw (Class C7)	Ball screw (Class C7)	Ball screw (Class C7)
Ball screw lead (Deceleration ratio) (mm)	20	10	20
Maximum speed Note 3 (mm/sec)	1200	600	1200
Moving range (mm)	250 to 1250	150 to 650	150 to 350
Robot cable length (m)	Standard: 3.5 Option: 5,10		

Note. The standard types are ZPMH with higher rigidity as compared with ZPM types which are conventional standard types. When you need the ZPM type, please consult YAMAHA.
Note 1. Use caution that the flame machining (installation holes, tap holes) differs from single-axis robots'.
Note 2. Positioning repeatability in one direction.
Note 3. When the X-axis stroke is longer than 850mm, resonance of the ball screw may occur depending on the operation conditions (critical speed). In this case, reduce the speed setting on the program by referring to the maximum speeds shown in the table below.

Maximum payload (kg)

	Z stroke (mm)		
Y stroke (mm)	150	250	350
150 to 650	10	9	8

Controller

Controller	Operation method
RCX240-R	Programming / I/O point trace / Remote command / Operation using RS-232C communication

MXYx 3 axes / ZPMHL P2

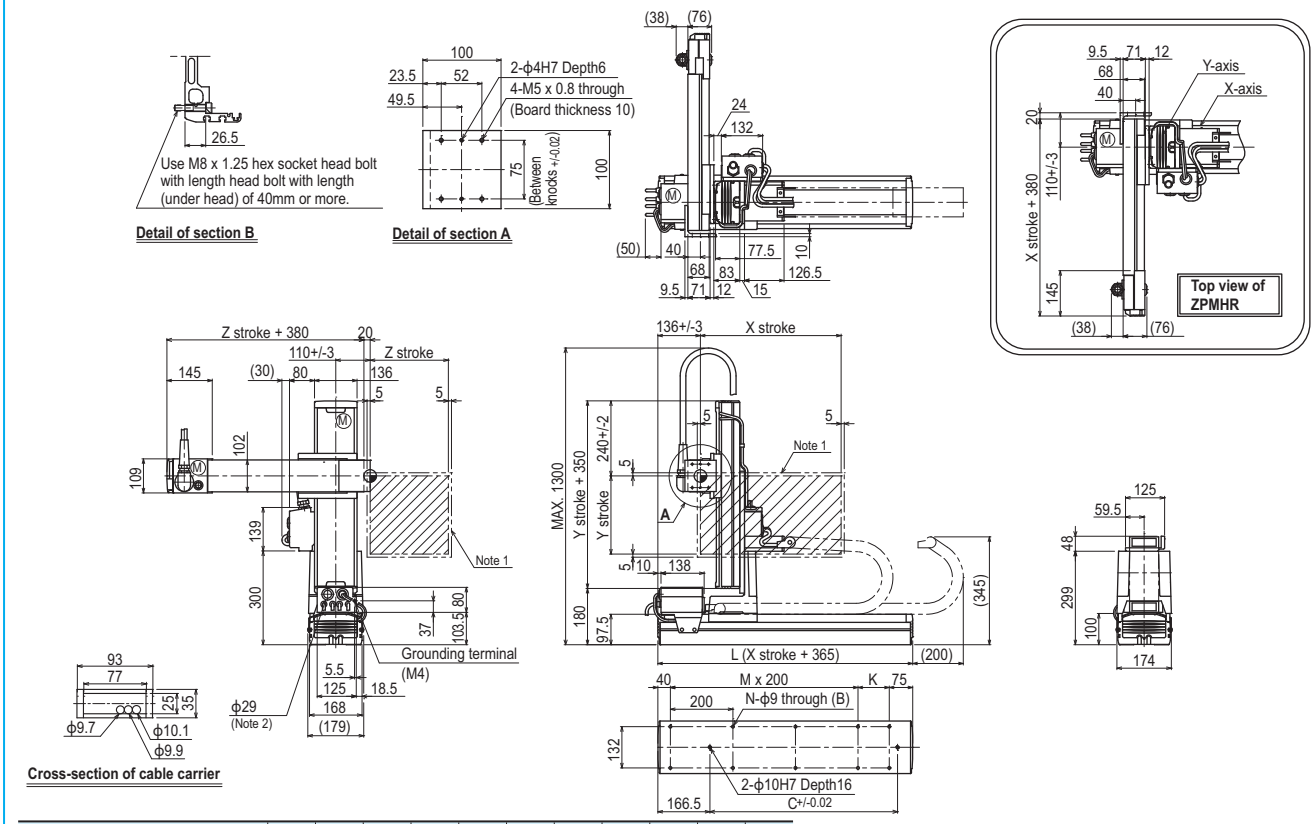

X stroke	250	350	450	550	650	750	850	950	1050	1150	1250
L	615	715	815	915	1015	1115	1215	1315	1415	1515	1615
K	100	200	100	200	100	200	100	200	100	200	100
C	240	420	600	600	780	780	960	960	1140	1140	1320
M	2	2	3	3	4	4	5	5	6	6	7
N	8	8	10	10	12	12	14	14	16	16	18

Y stroke	150	250	350	450	550	650

Z stroke	150	250	350

Maximum speed for each stroke (mm/sec) Note 3							
X-axis	1200	960	840	720	600	480
Speed setting	–	80%	70%	60%	50%	40%

Note 1. The moving range when returning to origin and the stop position when stopping by the mechanical stopper.
Note 2. User cable extraction port.
Note 3. This figure shows the combination for ZPMHL. For the combination for ZPMHR, see the top view in the figure.

Note 4. When the X-axis stroke is longer than 850mm, resonance of the ball screw may occur depending on the operation conditions (critical speed). In this case, reduce the speed setting on the program by referring to the maximum speeds shown in the table at the left